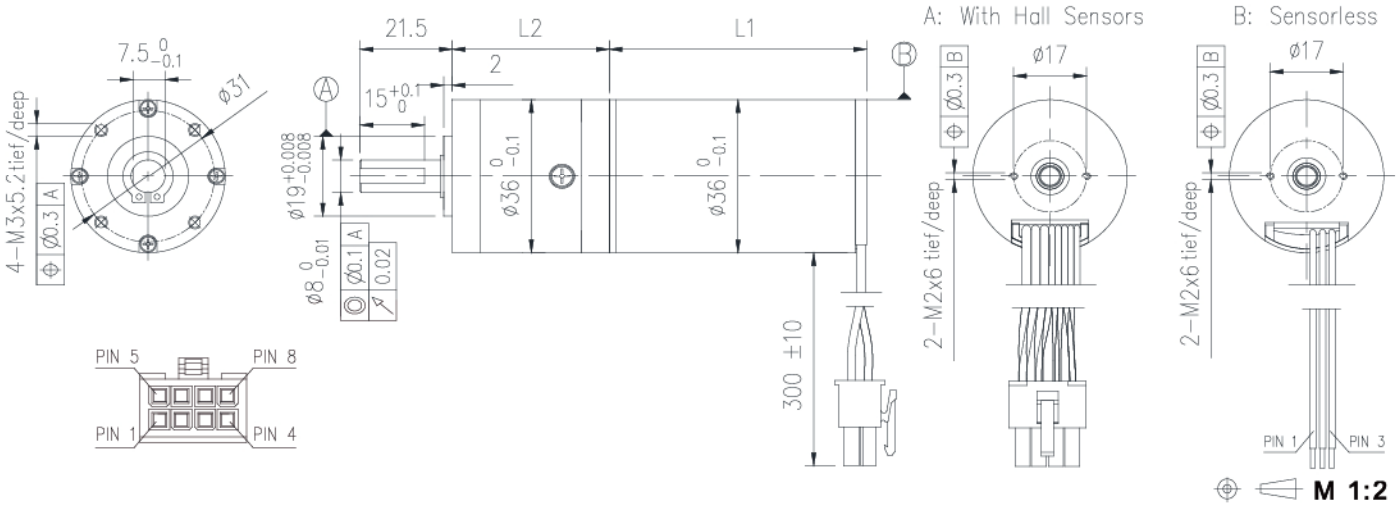


| | | | ECG36..L<br>ECG36..S | |
|---|---|---|---|---|
| **Motor type** | | | **P36** | |
| 1 | Length of motor L1 | ECG3660S/L mm | 60 | Motor performance at P22 |
| | | ECG3670S/L mm | 70 | Motor performance at P23 |
| | | ECDG3673S mm | 73 | Motor performance at P37 |
| | | ECDG3683S mm | 83 | Motor performance at P38 |

| | | | | | | |
|---|---|---|---|---|---|---|
| **Gearhead Data** | | | | | | |
| 2 | Housing material | | Steel | | | |
| 3 | Geartrain material | | Steel | | | |
| 4 | Bearing type on output shaft | | Ball bearing | | | |
| 5 | Max. radial load (10mm from flange) | N | 98 | | | |
| 6 | Max. axial load | N | 58.8 | | | |
| 7 | Radial play of shaft | mm | 0.04 | | | |
| 8 | Thrust play of shaft | mm | 0.4 | | | |
| 9 | Backlash at no load | ° | 2 | | | |
| 10 | Max. continuous speed | rpm | 30000 | | | |
| 11 | Operating temperatue range | ℃ | -30..+100 | | | |
| 12 | Number of stages | | 1 | 2 | 3 | 4 |
| 13 | Max continuous torque | Nm | 3.24 | 4.32 | 5.4 | 6.48 |
| 14 | Max. intermittent torque | Nm | 6.48 | 8.64 | 10.8 | 12.96 |
| 15 | Max. efficiency | % | 90 | 83 | 77 | 72 |
| 16 | Gearhead length L2 | mm | 35.6 | 44.2 | 52.8 | 61.4 |
| 17 | Ratio | X:1 | 4.3,5.1, 6.3, 7.6 | 14.7,16.3, 18.6,19.2, 21.9,23.9, 25.8, 27.2, 28.9, 32 38.7, 39.7, 48, 58.1 | 65.6, 74.6, 81.4, 90.5, 98.5, 109, 112.1, 124.6, 123, 141.8, 150.4, 162.4, 171.2, 182, 196.5, 220.3 243.9, 250.7 | 277.4, 302.6, 335.8, 351, 382.2, 413.2, 459.3, 500.1, 537.4, 583.5, 620.6, 686.9, 744.7, 824.4, 869, 924.2 1006, 1388, 1680, 3380 |

## Connection

**Conection A (Sensor)** PTFE

| | | | |
|---|---|---|---|
| Pin 1 | Motor winding MB | AWG20 | Green |
| Pin 2 | Vhall 3-18 VDC | AWG26 | Red |
| Pin 3 | Hall sensor HA | AWG26 | Yellow |
| Pin 4 | Hall sensor HC | AWG26 | Blue |
| Pin 5 | Motor winding MA | AWG20 | Yellow |
| Pin 6 | Motor winding MC | AWG20 | Blue |
| Pin 7 | GND | AWG26 | Black |
| Pin 8 | Hall sensor HB | AWG26 | Green |

Conector
Molex5557-8P

**Conection B (Sensorless)** PTFE

| | | | |
|---|---|---|---|
| Pin 1 | Motor winding MC | AWG20 | Yellow |
| Pin 2 | Motor winding MB | AWG20 | Green |
| Pin 3 | Motor winding MA | AWG20 | Blue |

## Configuration

Pinion: Metal/Plastic
Ball bearing: Preload
Flange: Standard frange front&back/customize the frange
Shaft: Length/Diameter/Cut face/double shaft/hollow shaft
Leadwire: PVC/Silicon/Teflon/UL No/Dimensions/length
Connector: JST/MOLEX/TE

More:
Special design for high speed/big torque
ECD series can be chosen in some application
Details please contact our sales engineer